USED ON	N.H.ASSY
VTFO-80000	

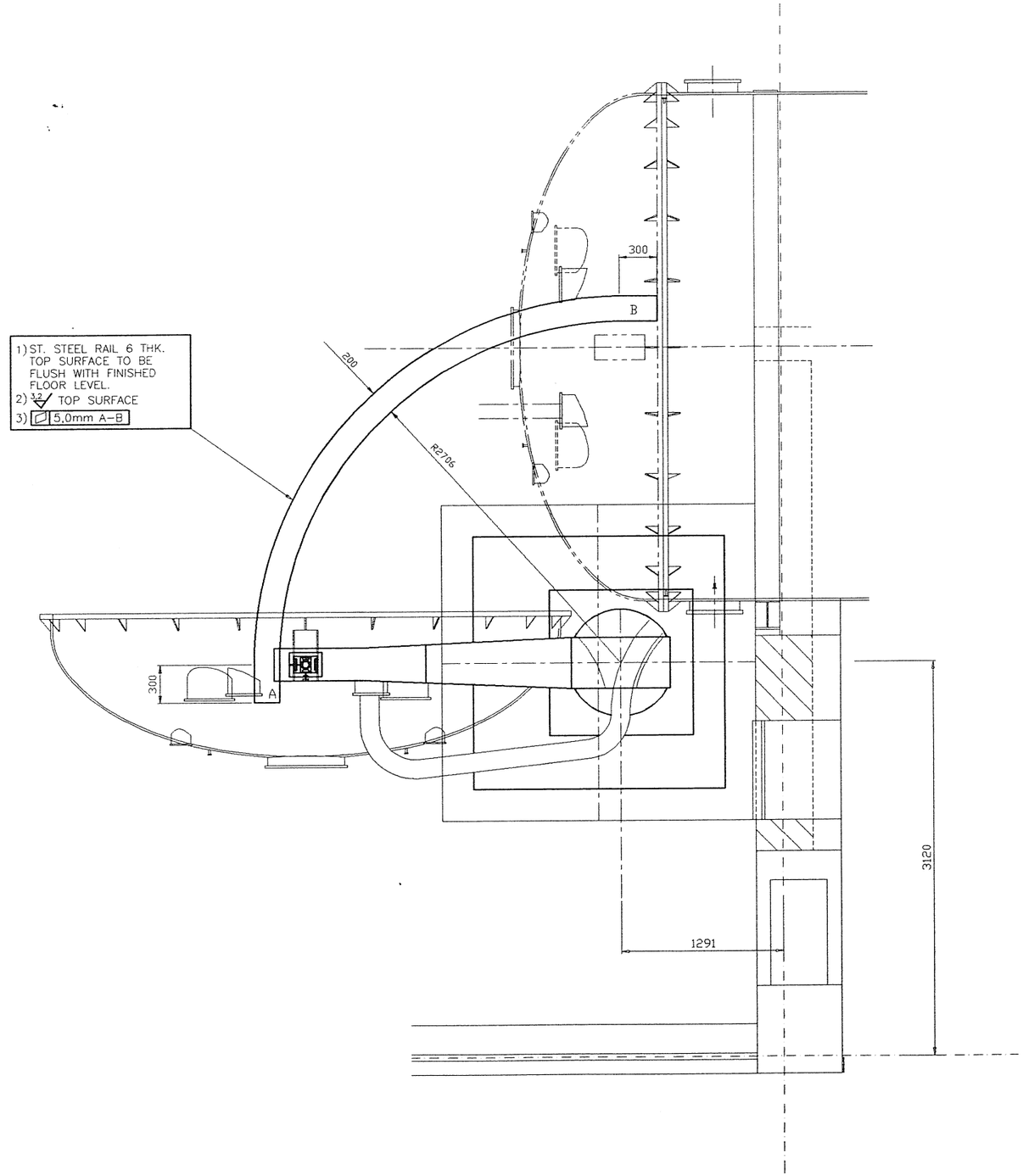

DRAWING STATUS	ACTIVE:	SIGN:	DATE:
INFORMATION ONLY			
FOR 3rd. PARTY APPROVAL			
PERMIT MATERIAL ORDER			
FOR MANUFACTURE			
AS BUILT			
SUPERSEDED			

REVISION DETAILS	ISS	C/NOTE	DRAWN	CHECK	APPR	P.OFF.	DATE
	A	–	ID			GDL	92-04-07

TO SABS 0111

DISC NO/FILE NAME: VTFOA80D

TITLE : DOOR RAIL

ISSUE A

DRG NO : VTFO-80050-02

SHT 1 OF 1

SCALE : 1:20

WHEN PLOTTED ON UNLESS OTHERWISE STATED A1